EVS29 Symposium
Montréal, Québec, Canada, June 19 - 22, 2016

Implementation of an Adjustable Target Modulation Index for a Variable DC Voltage Control in an Electric Delivery Truck

Ali Najmabadi[1], Kieran Humphries, Benoit Boulet
[1]*McGill University, Montreal, Canada, ali.najmabadi@mail.mcgill.ca*

Abstract Summary

This paper introduces an alternative control strategy for the variable voltage control of an electric drivetrain for a Class 4 medium-duty delivery truck and compares the resulting vehicle energy consumption over standardized drive cycles. The baseline system, S1, uses a standard electric drivetrain without a DC-DC and a battery at 460 V. The proposed system, S2, contains a DC-DC converter and a lower voltage battery with three voltage options being investigated: 200 V, 230 V, and 300 V. Previous work has shown that using a bi-directional DC-DC converter, the Fixed Target Modulation Index (FTMI) of the power electronics can be optimized in order to reduce the energy consumption across a drive cycle. In this study an Adjustable Target Modulation Index (ATMI) is proposed, which combines the best aspects of the fixed target modulation index control to attempt to improve efficiency even further. The new control strategy is shown to improve the energy consumption by up to 2.34% over a vehicle with a conventional electric drivetrain, depending on the required drive cycle.

Keywords: BEV, DC-DC, electric drive, energy consumption, simulation

1 Introduction

Electric vehicles built on different platforms and with different powertrain architectures can all benefit from improved efficiency, leading to less energy consumption and further vehicle range. One potential class of vehicles that can benefit from electrification is the medium-duty Class 4 fleet delivery truck. A defining characteristic of this category is that the applicable vehicle drive cycles usually have very low average speeds and go through many start and stop cycles [1], which indicates that the motors in these vehicles will operate mostly in the low RPM region. Previous work has shown that traditional motor drives (Fig. 1) which operate permanent magnet motors could obtain higher efficiencies in the low RPM region when a DC-DC converter is added to the system between the battery and the inverter (Fig. 2) [2, 3, 4, 5, 22, 23]. The DC-DC converter gives the designer freedom to vary the DC bus voltage and operate the overall system more efficiently. It has been shown that the target modulation index (MI) can be optimized in order to reduce the energy consumption across a drive cycle [22]. This study will focus on an adjustable target MI control that will operate the system at its optimal point.This paper is organized in the following manner: Section 2 reviews relevant work with regards to variable DC bus voltage control. Section 3 explains the implementation of a new control strategy. Finally, Sections 4 and 5 present the results and the conclusion.

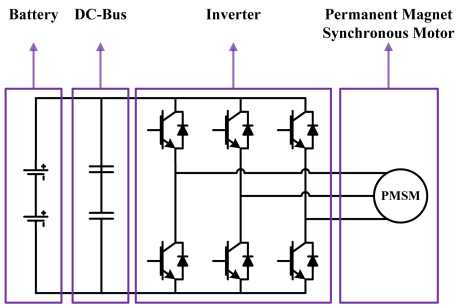

Figure 1: System 1 topology (S1) [22, 23]

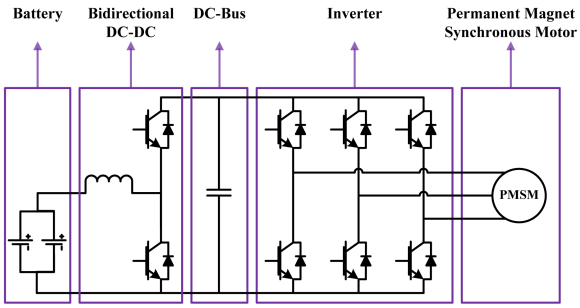

Figure 2: System 2 topology (S2) [22, 23]

2 Literature Review

2.1 General Applications of the DC-DCs

The following are some of the potential applications of a DC-DC converter in an electric motor drive.

1. Linkage of multiple energy storage systems and energy conversion systems (ESECS) in one drivetrain:

   Multiple ESECS can be connected to the same DC bus using multiple DC-DCs. This type of system allows different ESECS to function at their most efficient operating point and therefore increases the overall system efficiency [6, 7, 8, 9, 10, 11, 12, 13, 14]. The Toyota Prius drivetrain is an example of such a system. It connects a battery to an electric generator which is powered by an internal combustion engine [2, 3, 4, 5].

2. Expanding the torque speed envelope:

   Increasing the DC bus voltage above the battery voltage allows the motor to be operated at higher speeds. Once more, the Toyota Prius is an example of such a system. The battery voltage in this system is boosted from 200 V at the battery to a 500 V on the DC bus [4].

3. Increasing the system efficiency in certain operation regions:

   By varying the DC-bus voltage, the overall system can obtain higher efficiency in certain regions of operation [15, 16, 17, 18, 19, 20, 22, 23]. This topic is the main focus of this paper and will be further explored in the next section.

2.2 Increasing the system efficiency using a DC-DC converter

With a lower voltage battery pack and by varying the DC bus voltage, system S2 allows the inverter to be operated at a higher MI for a wider operating range. When inverters are operated at higher modulation indices they are more efficient. Furthermore, they produce higher quality waveforms which result in lower ohmic losses from the motor. Fig. 3 shows the traditional control strategy of a 2 level inverter (S1) and Fig. 4 shows the control strategy for S2 with a target MI of 1. It can be seen that before the base speed the MI of S2 is maintained at a higher value compared to S1. Therefore it is expected that there will be improvements in terms of efficiency in the low RPM region [15, 16, 17, 18, 19, 20].

As seen in Fig. 4, the target MI is selected for the moment that the DC-DC converter starts to boost the battery voltage. Even though most publications focus on operating the system at a target MI of 1 or high values of MI, it is possible to have a target MI higher than 1 and to operate the inverter in the overmodulation region. A sample control strategy for a fixed target MI of 1.5 is shown in Fig. 5.

There are two consequences of this high value fixed target MI strategy. More sideband harmonics are created around the harmonic frequencies since the inverter is operated in overmodulation. However, the dominant harmonics may not be as large in magnitude. Depending on the nature of the load and the switching frequency, the system may be more efficient in the overmodulation region compared to the linear region [21]. Moreover, since the

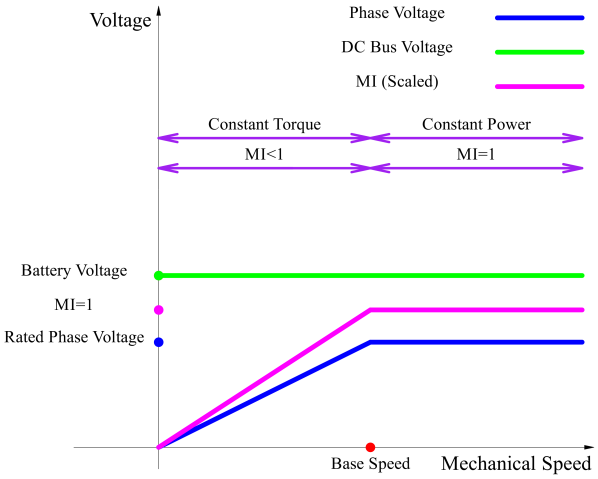

Figure 3: S1, traditional control strategy [22, 23]

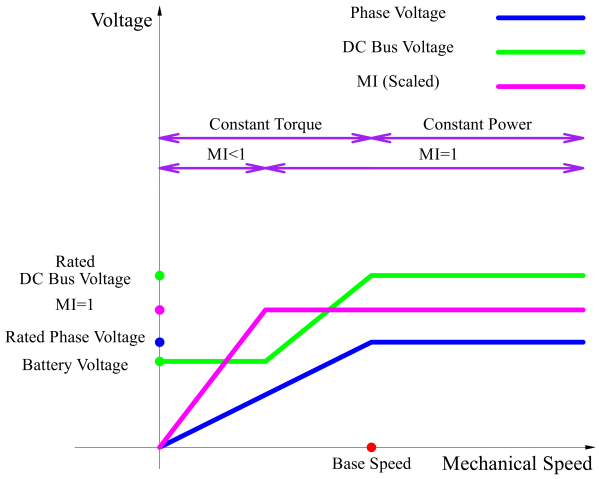

Figure 4: S2, control with target MI=1.0 [22, 23]

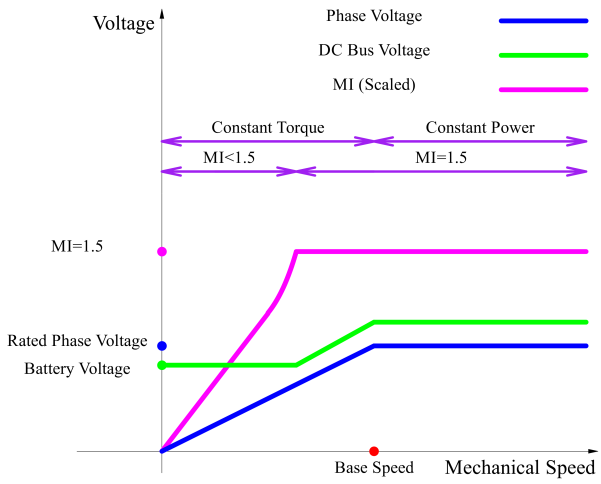

Figure 5: S2, control with target MI=1.5 [22, 23]

inverter is operated in the overmodulation region, the boosting requirements of the DC-DC converter will be lower and converter's efficiency could improve. Therefore, depending on the vehicle design and drive cycle, a specific target MI could be more desirable than that of 1. This control strategy will be referred to as the Fixed Target Modulation Index (FTMI) control. Previous work has shown that the energy consumption of a vehicle during a cycle varies depending on the target MI and can be minimized by choosing the best FTMI [22].

Furthermore, the battery voltage can also be considered as an optimization parameter since its value will change the boosting requirement of the DC-DC converter and the operation region of the inverter. The main focus of this paper will be to study a system that will operate the inverter at its best MI for any given point in the torque speed envelope at a specific voltage, further improving on the previous efficiency. This strategy is based on a look up table in order to operate the system at its ideal MI and will be referred to as Adjustable Target MI (ATMI) control.

3 Method

The motor model and power electronic models respectively, were implemented in MotorSolve and PSIM and then were linked to Simulink for the overall control. The copper and core losses of the motor and the switching and conduction losses of the power electronics were considered. Furthermore, the ohmic losses due the internal resistance of the boost inductor were also considered within the DC-DC converter losses. Once the efficiency maps

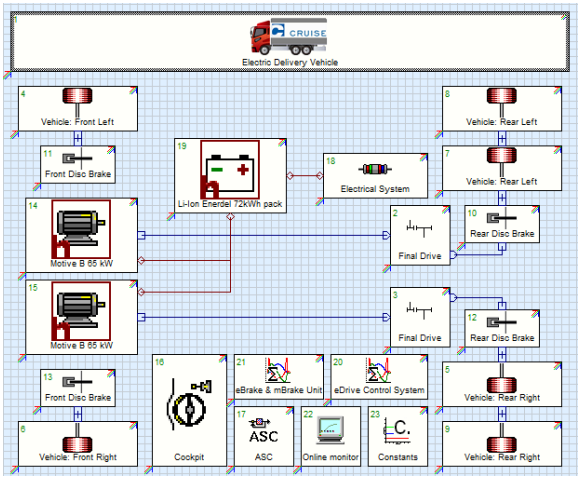

Figure 6: Vehicle architecture

of different systems were created, the vehicle model, the drive cycles, and the efficiency maps were imported into AVL Cruise for determination of the energy use during the cycle. Fig. 6 shows the overall vehicle architecture. It can be seen that the vehicle is operated by one permanent magnet synchronous motor per each rear wheel assembly. S1 was implemented using a 460 V battery and run on all drive cycles to create the baseline results. The full FTMI test procedures were then run for three different battery voltages of 200V, 230V and 300 V and for seven target MIs from 0.9 to 1.5 at intervals of 0.1. Finally, the FTMI motor efficiency maps were combined into one ATMI map using the best efficiency MI option at each point for each voltage. This way, three ATMI efficiency maps were obtained, one for each test voltage. The ATMI strategy varies the target MI in order to get the best possible efficiency from the system.

Figs. 7 and 8 show the standard and real world drive cycles, respectively. The standard drive cycles are examples of cycles tailored to city driving or vocational vehicles including waste collection and delivery. The real world drive cycles were collected in the greater Montreal area on actual delivery routes used by the Purolator delivery service. The Anjou and Laval routes are mostly suburban routes with small sections of highway driving at the start and end of the cycles. The Lachine cycles are short distance inner city cycles that include long stops for delivery to high-rise buildings in downtown Montreal. These cycles offer a snapshot of the potential applications for a Class 4 delivery vehicle in a large city setting.

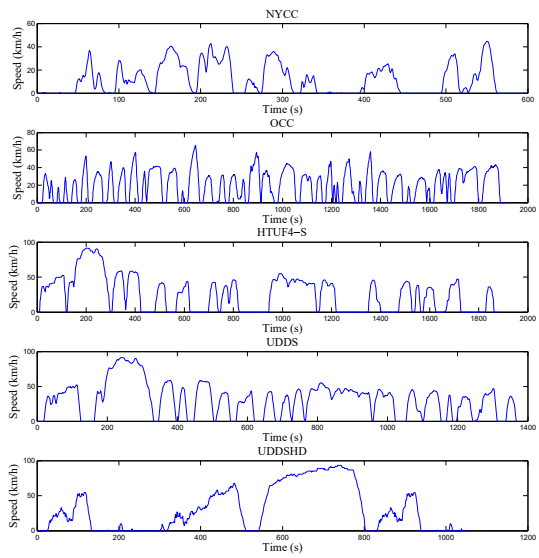

Figure 7: Speed traces of standard drive cycles; NYCC, OCC, HTUF4-S, UDDS, and UDDSHD [22, 23]

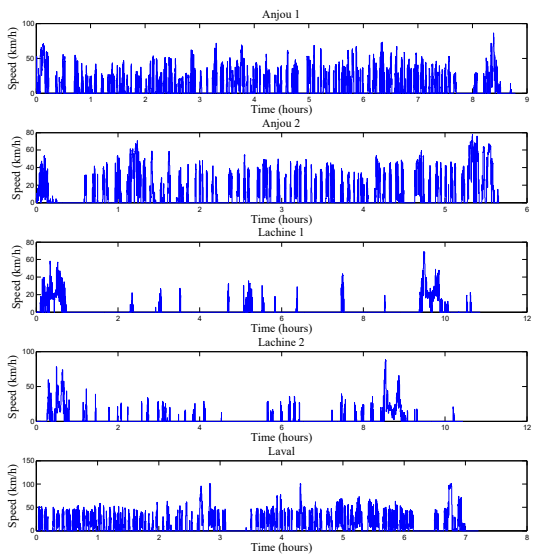

Figure 8: Speed traces of recorded daily drive cycles for delivery trucks in Anjou, Lachine, and Laval [22, 23]

4 Results

Fig. 10 shows the efficiency map of S1 which is used as the baseline. In order to be able to easily compare the effect of a control strategy on the efficiency, percent efficiency difference (PED) maps were created. In these maps, a positive value represents a percent improvement compared to the baseline and a negative value represents a percent degradation compared to the baseline. Fig. 9 shows shows example PED maps for the FTMI control strategy. In these graphs the zero lines represent the break even point between S1 and S2. As MI is increased, the zero line moves to the right. This means that the efficiency at low RPM is increased when compared to S1. However, at the same time the high RPM operation is significantly degraded at high MI and therefore a low MI is better for the high RPM operation. PED maps were created for all FTMI and all voltages, and then these were imported into the vehicle simulator and run over the drive cycles.

Figs. 11 to 13 show the PED at the three different voltages for the ATMI control strategy. It can be seen that the maps have the behavior of high FTMI strategy in the low RPM region and the behavior of the low FTMI in the high RPM regions. These PEDs are essentially the combination of the best points for each FTMI control PED.

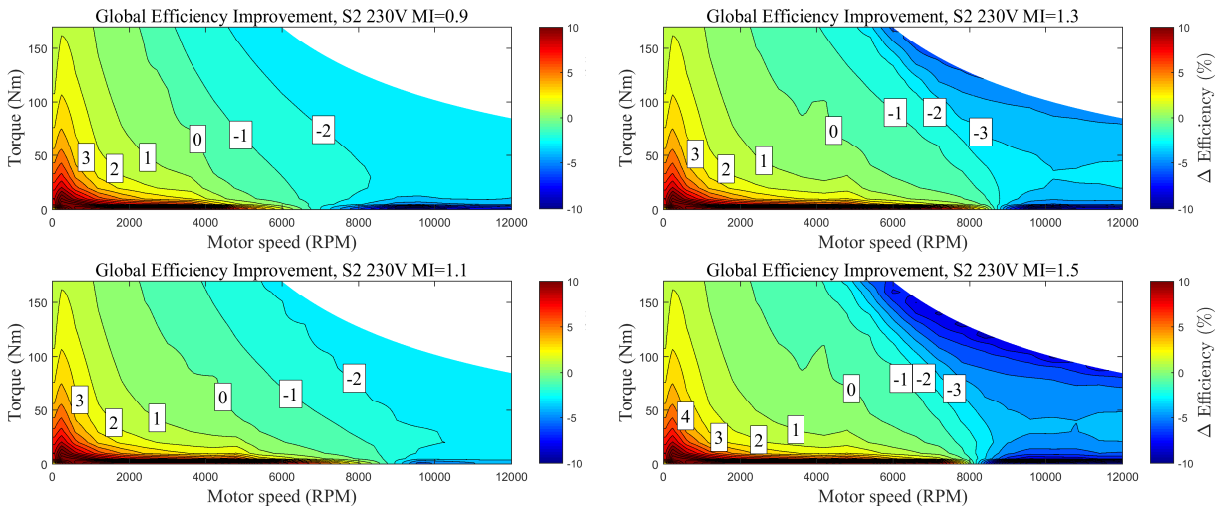

Figure 9: Sample FTMI PEDs for example MIs and 230 V, combined below with FTMI=1.0, 1.2, 1.4 to form ATMI PED 230 V

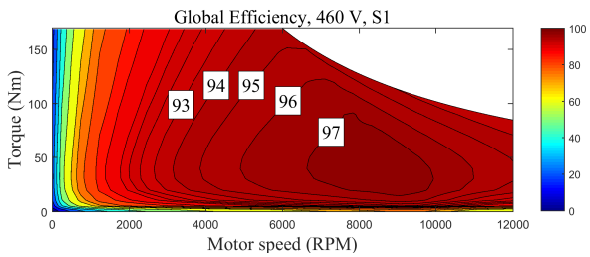

Figure 10: The global efficiency of S1

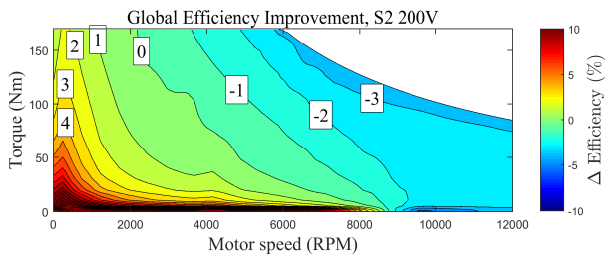

Figure 11: ATMI PED at 200 V

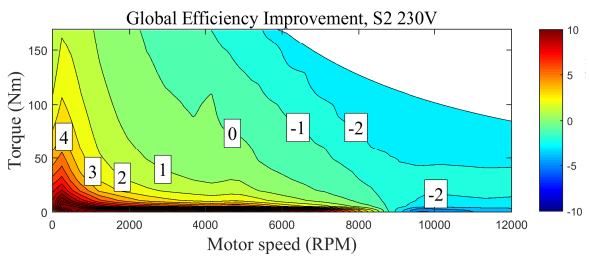

Figure 12: ATMI PED at 230 V

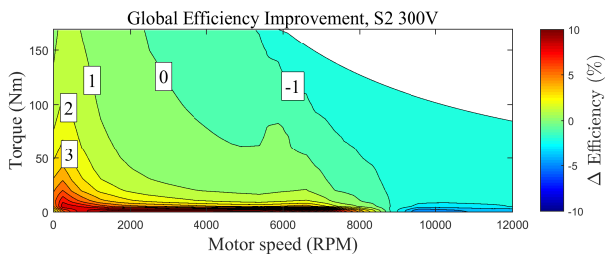

Figure 13: ATMI PED at 300 V

Table 1: Results Summary

Cycle	Original S1, 460 V Energy kWh	Fixed Target MI S2, Best Case Scenarios MI -	Voltage V	Energy kWh	Diff %	Variable Target MI S2, Best Case Scenarios Voltage V	Energy kWh	Diff %
NYCC	1.450	1.3-1.5	200	1.416	2.34	200	1.416	2.34
OCC	6.266	1.5	200	6.136	2.07	200	6.135	2.09
HTUF4S	7.082	1.2	230	7.054	0.40	230	7.034	0.68
UDDS	6.877	1.2	230	6.861	0.23	230	6.844	0.48
UDDSHDV	5.725	1.1	300	5.755	-0.52	300	5.747	-0.38
Anjou 1	60.08	1.4	200	59.18	1.50	200	59.14	1.57
Anjou 2	43.80	1.4	200	43.36	1.01	200	43.33	1.07
Lachine 1	22.14	1.4	200	21.56	2.61	200	21.56	2.64
Lachine 2	25.27	1.2	200	24.72	2.18	200	24.70	2.26
Laval	86.37	1.2	230	86.20	0.20	230	86.07	0.35

Table 1 presents the results for the best FTMI and ATMI systems and the percent difference from the baseline S1.

The "Diff" columns in Table 1 represent the percent energy improvement of different strategies compared to the baseline, S1. It can be seen that the ATMI control strategy matched or improved the energy consumption of the FTMI strategy for all drive cycles. In cases where the average driving speed is lowest (NYCC, OCC, Lachine), the improvement of the ATMI system versus the FTMI is minimal. In the region of operation of these cycles, the MI can be high without any performance penalty at high speed since there is little high speed operation. The improvement of the ATMI versus FTMI strategy is more noticeable on the HTUF4S, UDDS, and Laval cycles, which include some higher speed operation. Since these cycles have more varied speeds, it is an advantage for the ATMI strategy to be able to operate at high MI when the speed is low and at lower MI to mitigate efficiency loss when the speed is higher. On cycles with varied speeds, it is clear that the ATMI strategy is superior.

5 Conclusion

This paper studied and compared the FTMI and ATMI for three battery voltages of 200 V, 230 V and 300 V and for seven target MIs from 0.9 to 1.5 at intervals of 0.1. Compared to the FTMI, the ATMI strategy for a variable DC voltage control was demonstrated to improve the performance of an electric delivery truck on cycles with varying speed and to match or exceed the performance on low speed cycles. The effectiveness of the FTMI is partly due to the characteristics of the drive cycles applicable to the delivery trucks that operate largely at low speed, but the ATMI expands this improvement to higher speed cycles as well. The cycle that most benefited from the ATMI control was the NYCC cycle at 2.34% of energy savings. However, this was identical to the FTMI control since this is a low speed cycle. On the other hand, the ATMI energy consumption on the UDDS cycle was reduced by 0.48% percent compared to the traditional system. With the FTMI strategy on the same cycle, there was only an improvement of 0.23%. For the HTUF4S, the ATMI strategy reduced the energy consumption by 0.68% compared to the S1 system, while the FTMI system was only able to reduce consumption by 0.40%.

On a whole, the ATMI strategy was most effective on cycles with a variety of driving speeds (both highway and city portions) since it improved the low speed efficiency like the FTMI strategy but also mitigated the efficiency loss at high speed that running at a high MI can have by adjusting the MI when needed. This is an improvement over the FTMI system and could be implemented in real-time in a vehicle control system. However, for both the DC-DC converter systems (ATMI and FTMI), the drive cycle must be known before implementation to avoid potential problems and maximize benefit from the system. For example, on the UDDSHDV cycle, neither the FTMI or ATMI systems were able to match the performance of the non DC-DC converter equipped S1 system.

Future work on this topic could consist of studying other DC-DC topologies that can be used to implement in an electric drivetrain system, as well as increasing the resolution of the FTMI and ATMI testing (to steps of less than 0.1 MI) for more accurate results.

References

[1] R. Barnitt, A. Brooker, L. Ramroth, *Model-based analysis of electric drive options for medium duty parcel delivery vehicles*, National Renewable Energy Laboratory, 2010.

[2] J. Hsu, C. Ayers, C. Coomer, *Report on Toyota/Prius motor design and manufacturing assessment*, Oak Ridge National Laboratory (ORNL), 2004.

[3] C. Ayers, *Evaluation of 2004 Toyota Prius hybrid electric drive system interim report*, report, Oak Ridge National Laboratory (ORNL), 2004.

[4] R. Staunton, C. Ayers, L. Marlino, J. Chiasson, T. Burress, *Evaluation of 2004 Toyota Prius hybrid electric drive system*, report, Oak Ridge National Laboratory (ORNL), 2006.

[5] T. Burress, S. Campbell, C. Coomer, C. Ayers, A. Wereszczak, *Evaluation of the 2010 Toyota Prius hybrid synergy drive system*, report, Oak Ridge National Laboratory (ORNL); Power Electronics and Electric Machinery Research Facility, 2011.

[6] S. Williamson, S. Lukic, A. Emadi, *Comprehensive drive train efficiency analysis of hybrid electric and fuel cell vehicles based on motor-controller efficiency modeling*, IEEE Transactions on Power Electronics, vol. 21, no. 3, pp. 730-740, 2006.

[7] M. Camara, H. Gualous, F. Gustin, A. Berthon, B. Dakyo, *DC/DC converter design for supercapacitor and battery power management in hybrid vehicle applications - polynomial control strategy*, IEEE Transactions on Industrial Electronics, vol. 57, no. 2, pp. 587-597, 2010.

[8] A. Khaligh, Z. Li, *Battery, ultracapacitor, fuel cell, and hybrid energy storage systems for electric, hybrid electric, fuel cell, and plug-in hybrid electric vehicles: state of the art*, IEEE Transactions on Vehicular Technology, vol. 59, no. 6, pp. 2806-2814, 2010.

[9] J. Silvestre, *Half-bridge bidirectional DC-DC converter for small electric vehicle*, International Symposium on Power Electronics, Electrical Drives, Automation, and Motion, SPEEDAM, 2008.

[10] K. Yalamanchili, M. Ferdowsi, *Review of multiple input DC-DC converters for electric and hybrid vehicles*, IEEE Vehicle Power and Propulsion Conference (VPPC), pp. 160-163, 2005.

[11] A. di Napoli, F. Crescimbini, S. Rodo, L. Solero, *Multiple input DC-DC power converters for fuel-cell powered hybrid vehicles*, IEEE Power Electronics Specialists Conference (PESC), vol. 4, pp. 1685-1690, 2002.

[12] A. di Napoli, F. Crescimbini, L. Solero, F. Caricchi, F. Capponi, *Multiple input DC-DC power converters for power-flow management in hybrid vehicles*, IEEE Industry Applications Conference, vol. 3, pp. 1578-1585, 2002.

[13] S. Lukic, S. Wirasingha, F. Rodriguez, J. Cao, A. Emadi, *Power management of an ultracapacitor/battery hybrid energy storage system in an HEV*, IEEE Vehicle Power and Propulsion Conference, pp. 1-6, 2006.

[14] S. Lukic, J. Cao, R. Bansal, F. Rodriguez, A. Emadi, *Energy storage systems for automotive applications*, IEEE Transactions on Industrial Electronics, vol. 55, no. 6, pp. 2258-2267, 2008.

[15] J. Estima, A. Cardoso, *Efficiency analysis of drive train topologies applied to electric/hybrid vehicles*, IEEE Transactions on Vehicular Technology, 61(2012), 1021-1031.

[16] J. Estima, A. Cardoso, *Performance analysis of a PMSM drive for hybrid electric vehicles*, IEEE International Conference on Electrical Machines (ICEM), 2010, 1-6.

[17] J. Estima, A. Cardoso, *Thermal evaluation of different drive train topologies for electric/hybrid vehicles*, IEEE International Conference on Electrical Machines (ICEM), 2014, 2454-2460.

[18] T. Schoenen, M. Kunter, M. Hennen, R. de Doncker, *Advantages of a variable DC-link voltage by using a DC-DC converter in hybrid-electric vehicles*, Proc. IEEE Vehicle Power and Propulsion Conference (VPPC), 2010.

[19] S. Tenner, S. Gunther, W. Hofmann *Loss minimization of electric drive systems using a dc/dc converter and an optimized battery voltage in automotive applications*, Proc. IEEE Vehicle Power and Propulsion Conference (VPPC), 2011, 1-7.

[20] H. van Hoek, M. Boesing, D. van Treek, T. Schoenen, R. de Doncker, *Power electronic architectures for electric vehicles*, VDE-Kongress 2010.

[21] N. Mohan, T. Undeland, W. Robbins, *Power electronics: converters, applications, and design*, 3rd Edition, John Wiley & Sons Inc. 2003.

[22] A. Najmabadi, K. Humphries, B. Boulet, *Effects of target modulation index on variable DC voltage control for electric powertrains in medium duty delivery trucks*, Proc. Vehicle Power and Propulsion Conference (VPPC), 2015.

[23] A. Najmabadi, K. Humphries, B. Boulet, *Application of a bidirectional DC-DC in an electric powertrain for medium duty delivery trucks*, Proc. IEEE International Electric Machines & Drives Conference (IEMDC), 2015.

Authors

Ali Najmabadi received his bachelor's degree in Electrical Engineering at McGill University in 2013. His masters degree in Electrical Engineering at McGill University is focused on applications of power electronics and control for electric and hybrid vehicles. His research is centered on increasing the overall efficiency of electric delivery trucks by exploring new powertrain topologies and control strategies. His experience includes prototyping electric powertrains for different platforms, such as electric race cars and electric snowmobiles.

Kieran Humphries is a native of Ottawa, Ontario, Canada but currently resides in Montreal, Quebec. He completed a master's degree in mechanical engineering at McGill University and is employed as a research assistant at McGill. His Master's thesis analyzed the use of two-speed transmissions in electric delivery vehicles and his current work includes the simulation of electric and hybrid vehicles using advanced software and optimization techniques.

Benoit Boulet, Eng., Ph.D., SMIEEE, is Associate Dean (Research & Innovation) of the Faculty of Engineering at McGill University and an Associate Professor in the Department of Electrical and Computer Engineering. Professor Boulet obtained a Bachelor's degree from Universit Laval in 1990, a Master of Engineering degree from McGill University in 1992, and a Ph.D. degree from the University of Toronto in 1996, all in electrical engineering. He is a registered Professional Engineer in the province of Qubec. Professor Boulet's research areas include the control of biomedical systems, green energy systems, robust industrial process control and robust vehicle control.