EVS29 Symposium
Montréal, Québec, Canada, June 19-22, 2016

A hybrid electric fuel cell minibus: drive test

Laura Andaloro, Salvatore Micari, Giuseppe Napoli, Antonio Polimeni, Vincenzo Antonucci

andaloro@itae.cnr.it, micari@itae.cnr.it, napoli@itae.cnr.it, antonucci@itae.cnr.it, polimeni@itae.cnr.it

Institute for Advanced Energy Technologies "Nicola Giordano", National Research Council of Italy,

Salita S. Lucia sopra Contesse 5, 98126 Messina, Italy.

Summary

Meeting the worldwide energy demand for the present and future transportation systems with the least impact on the environment is a big challenge. In the i-NEXT (Innovation for greeN Energy and eXchange in Transportation) project a Fuel Cell Hybrid Electric Vehicle (FCHEV) minibus for people transportation has been implemented. This paper reports some preliminary test drive. The vehicle architecture has been developed considering that, both recharge time and autonomy of a purely electric vehicle are operational limits, and the fuel cell technology is able to enhance these parameters. An electric engine with lithium ion batteries and a 20 kW Fuel Cell System characterize the vehicle. The test drive has been carried out in Capo d'Orlando municipality (Sicily) allowing the acquisition of key data.

Keywords: HEV (Hybrid Electric Vehicle), mobility, EREV (Extended Range Electric Vehicle), ZEV (Zero Emission Vehicle), Fuel Cell

1 Introduction

The safeguard of the environment is one of the reasons pushing towards the use of alternative fuelled vehicles. The transport industry in itself represents an important part of the economy: in the EU it directly employs around 10 million people and represents about 5% of Gross domestic product (GDP). In order to reduce emissions and fuel consumption, the European Community established more and more restrictions to vehicles and fuel used. The "White Paper" has been published to reach a sustainable and cooperative transport policy and one of its targets is the reduction of emissions by 60% within 2050 [1]. However, the battery electric vehicles (BEVs) although allowing zero emissions have relevant constraints like low autonomy and the slow recharging time. These two problems can be overtaken considering fuel cell hybrid electric vehicles (FCHEV). This hybrid configuration has some advantages than BEV like: increases of the autonomy, optimization of the battery recharging time and the vehicle weight [2]. Hua et al. [3] summarize a state of the art of the fuel cell electric bus, demonstrating that they are more fuel-efficient respect to traditional diesel buses, although some barriers (fuel cell life, initial costs, cost and availability of the hydrogen) influence their diffusion. A similar study is reported in [4] for the Chinese market. Gao et al. [5] discuss the architecture of a hybrid fuel cell/battery city bus, describing the road tests conducted to verify the bus performances. In a recent Italian project "i-NEXT" within the framework "Smart mobility and last-mile logistic" and "Renewable energy and smart grid" was implemented a hybrid (fuel cell hybrid electric vehicle, FCHEV) city minibus for people transportation and this paper reports some test drive. The prototype of minibus is an Iveco (Daily Way Ero), the original configuration was transformed removing the internal combustion engine (ICE) and placing a powertrain composed by the fuel cell system, a stack of lithium polymer batteries and an AC induction engine. It is divided in four sections: The first one is giving a general introduction about the transport sector problem and the advantage of using FCHEV. Section two deals Minibus features. In Section

three are reported the results related to the test drive carried on the bus. Main conclusions are described in the final section.

2 Minibus features

The FCHEV Minibus is a reconfiguration of an internal combustion traditional vehicle belonging to category M3 to an electric propulsion hybrid fuel cells and batteries. The fuel cell distributes the electrical power to the connecting line between the batteries and the traction inverter via a DC / DC converter. It is showed in the following figure.

Figure 1: FCHEV Minibus

The minibus is length 7.35 meters, high 2.7 meters with a weight of 5600 kilograms; it is able to transport 16 passengers. The operative version of the minibus is equipped with lithium polymer batteries (16 modules with 6 cells everyone sequentially connected); the nominal tension is 355 V and the total energy is 65 kWh. The FC is a PEM Nuvera Fuel Cells 21 kW @ 252 A. The hydrogen storage is constituted by two tanks, with a capacity of 150 litres (3.58 kg of hydrogen for tanks) at 350 bar. One of the benefits linked with the system is the regenerative brake, able to store in the battery the energy that would be lost under braking.

Table 1: Minibus features

Characteristic	Value
Max vehicle length	7348 mm
Max vehicle width	2745
Gross vehicle weight	5600 kg
Capacity	16 passengers
Engine	MES-DEA series 200-330
Engine power	Nominal: 40 kW Peak: 80 kW
Inverter	TIM600W (IGBT)
Batteries	16 modules Kokam Co.
Batteries energy	65 kWh
FC	PEM Nuvera Fuel Cells (128 cells)
FC power	21 kW @ 252 A
FC voltage	110-75V @ 35-325A
Hydrogen tanks	Nr: 2 Capacity: 2 x 150 litres @ 350bar
Hydrogen mass	2 x 3.58 kg
Voltage (inverter input)	80-400 Vdc
Max vehicle speed	70 km/h
Vehicle autonomy	about 100 km (BEV) about 200 km (FCHEV)

The size of each component has been chosen after an accurate evaluation of the target distance of the minibus. The final architecture of powertrain is composed as follow:

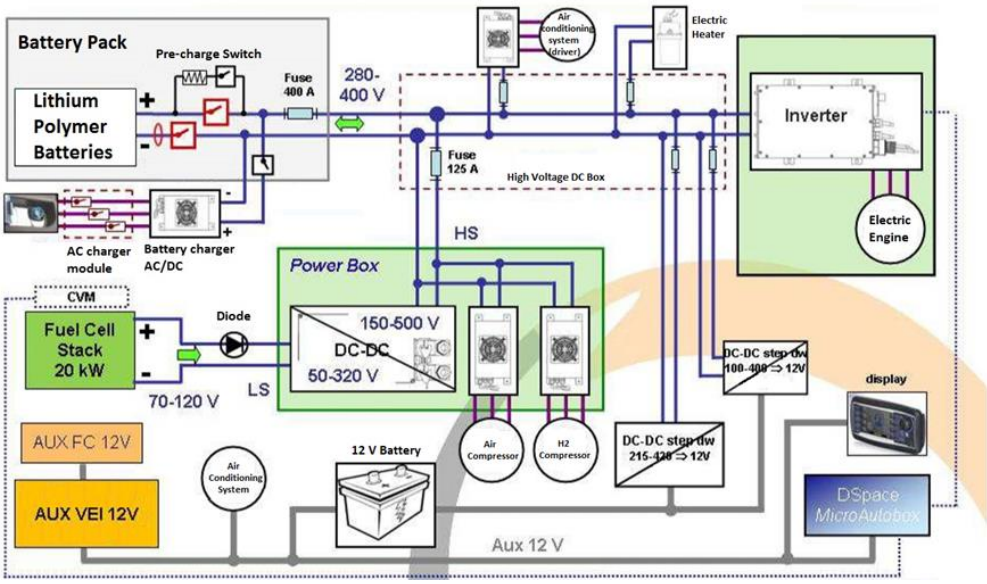

Figure 2: Minibus vehicle architecture

The energy management system is activated after the vehicle has run at least 500 meters. The logic activation/deactivation of the fuel cell system is controlled by two thresholds as a batteries SOC percentage. Thresholds are user adjustable. When the SOC of the batteries is above the high threshold, the fuel cell system is switched off. If the SOC of the battery falls below the lower threshold, the fuel cell is activated. The flow-chart in the following figure shows the implemented logic of the energy management system.

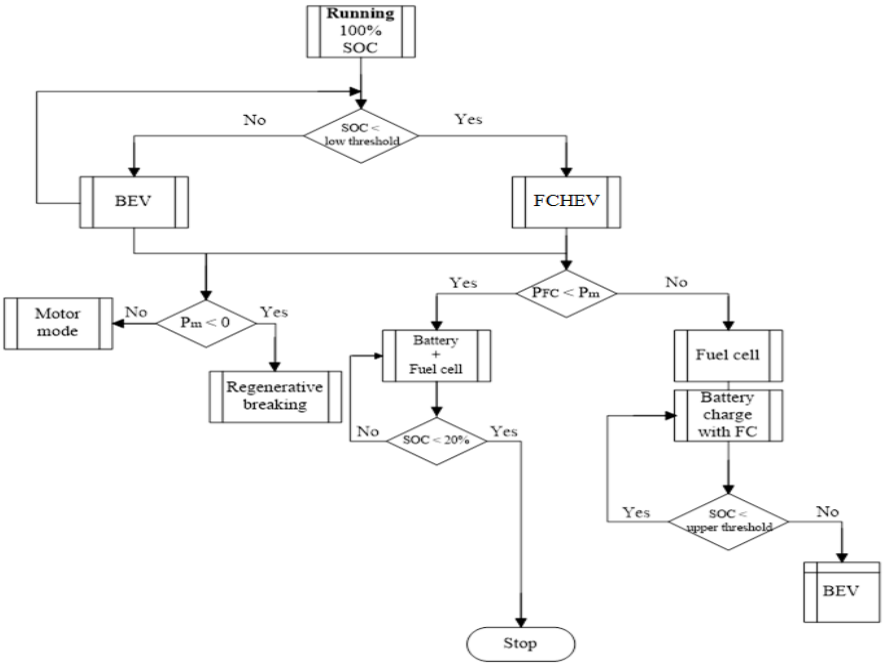

Figure 3: Flow chart energy management system

3 Test on minibus

The current output of the fuel cell system is set to values between 100A and 150A, guarantying a power between 10 kW and 15 kW able to support the battery discharge without stressing the system and ensuring the shelf life. These settings can be modified changing the test conditions (i.e. traffic congestion, slope). The turn on/turn off in relation to the SOC of the batteries, the selected range is between the 70% and the 90% of the SOC. The energy provided by the fuel cell is 94.51 kWh.

The test drive was made on real urban and suburban path, considering two vehicle configurations: only battery (BEV) or hybrid (FCHEV) mode. The variables measured are: battery current and voltage, fuel cell current and voltage, engine speed, battery SOC, travelled distance and energy consumption.

The first test was performed on a path of 6.42 kilometres, crossing the entire urban centre only in BEV mode. The maximum speed recorded is of 49.20 km/h with a mean speed is of about 15.60 km/h. The mean energy spent is 506.23 Wh/km, with an autonomy of about 102.72 km (80% DOD). In Figure 4 is shown the route taken, in Figure 5 the characteristic data acquired during the test. In green is showed the engine speed, in purple the SOC of the battery pack while battery current and voltage are reported respectively in yellow and blue.

Figure 4: Urban Path

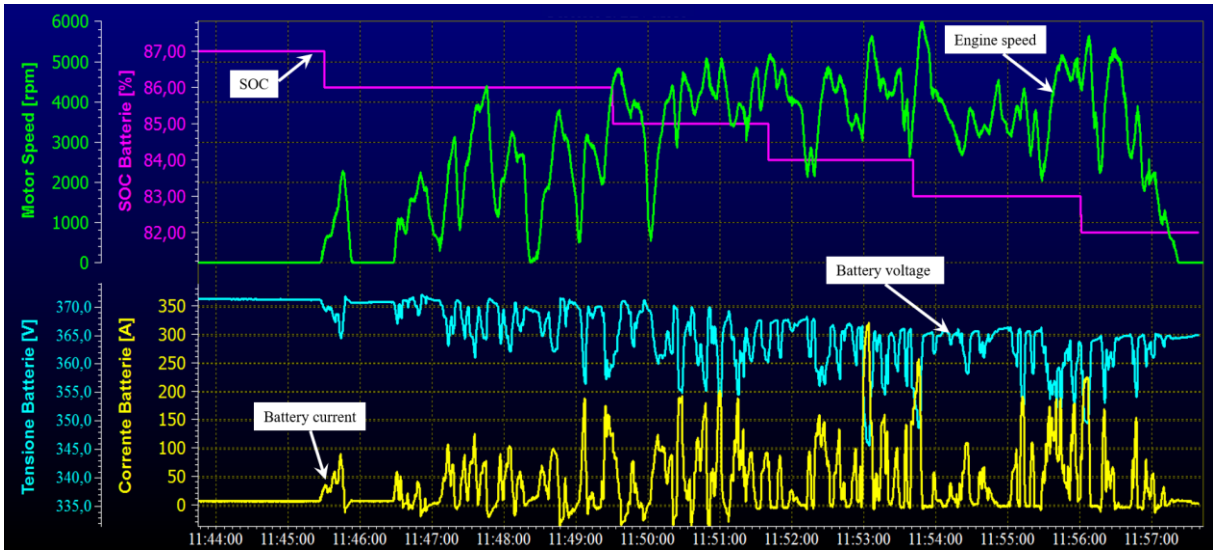

Figure 5: Test on urban path – BEV mode

The second test (FCHEV) was performed on a path of 28.50 kilometres, crossing the entire urban centre and reaching a near village. The maximum speed recorded is of 64.30 km/h, the mean speed is of about 36.40 km/h. The mean energy spent is 682.40 Wh/km, with an autonomy of about 214 km. During the test it was varied the supply of current of the FCS from 120A to 100A followed by a shut of down of vehicle to assess the robustness of the system. In Figure 6 is shown the route taken, in Figure 7 the characteristic data acquired during the test. In green it is showed the engine speed, in purple the SOC of the battery pack, battery current and voltage are reported respectively in yellow and blue whereas FCS voltage and current are in white and red.

Figure 6: Test on suburban path

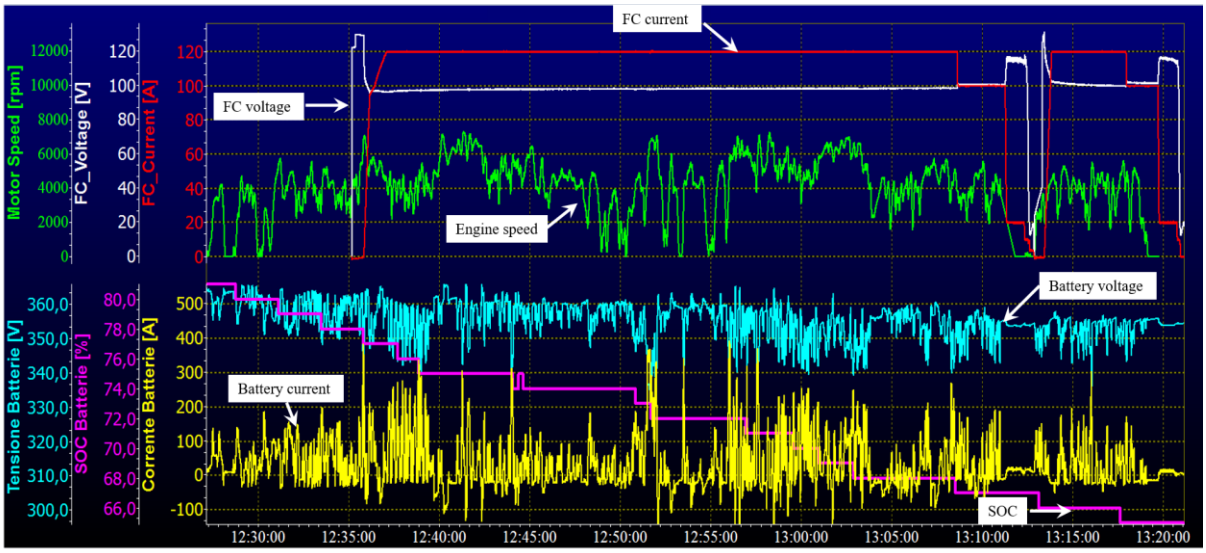

Figure 7: Test on suburban path

The third test (FCHEV) was performed in the suburban path, as the previous, but on a path length of 18.00 km characterized (in some road segments) by a slope gradient of 13%. The maximum speed recorded is of 49.00 km/h, the mean speed is of about 28.20 km/h. The mean energy spent is 778.60 Wh/km, with an autonomy of about 188 km. In Figure 8 is shown the route taken, in Figure 9 the characteristic data acquired during the test. In green is showed the engine speed, in purple the SOC of the battery pack, battery current and voltage are reported respectively in yellow and blue whereas FCS voltage and current are in white and red.

Figure 8: Test on suburban path

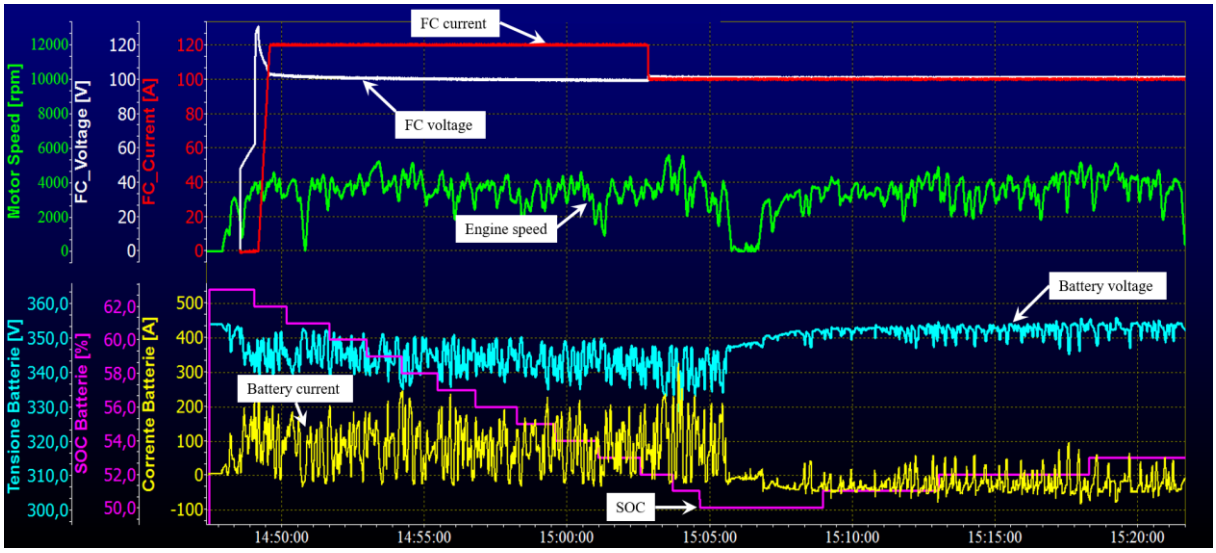

Figure 9: Test on suburban path with a slope gradient of 13%

Table 2 resumes the results obtained.

Table 2: Some results of the tests

TEST	Path length [km]	Max speed [km/h]	Mean speed [km/h]	Energy available(*) [Wh]	Energy spent [Wh/km]	Autonomy [km]
1	6.42	49.20	15.60	52000	506.23	103.00
2	28.50	64.30	36.40	146510	682.40	214.00
3	18.00	49.00	28.20	146510	778.60	188.00

(*) considering the 80% of the batteries energyr

4 Conclusion

The safeguard of the environment is one of the reasons pushing towards the use of alternative fuelled vehicles. However, the battery electric vehicles (BEVs) although allowing zero emissions have some constraints like low autonomy and the slow recharging time that can be overcome considering FCHEV. In this study preliminary test drive on a FCHEV minibus operating in a Range Extender configuration have been carried out. The test drive have been made on real urban and suburban path, considering battery (BEV) and hybrid (FCHEV) mode. The main variables measured have been: battery current and voltage, fuel cell current and voltage, engine speed, battery SOC, travelled distance and energy consumption. Passing from a level path to a path with slope of 13% the autonomy has been reduced by about 15%.The preliminary tests have provided more than satisfactory results.

Acknowledgments

Supported by National Operative Program, grants n. PON 04a2_h.

References

[1] European Commission (2011). “White paper”.

[2] F. Sergi, L. Andaloro, G. Napoli, N. Randazzo, V. Antonucci, *Development and realization of a hydrogen range extender hybrid city bus*, Journal of Power Sources, doi: 10.1016/j.jpowsour.2013.11.006, 250 (2014), 286-295

[3] T. Hua et al., *Status of hydrogen fuel cell electric buses worldwide*, Journal of Power Sources, doi:10.1016/j.jpowsour.2014.06.055, 269 (2014), 975-993.

[4] Y. Jia, H. Wang, M. Ouyang, *Electric power system for a Chinese fuel cell city bus*, Journal of Power Sources, doi:10.1016/j.jpowsour.2005.11.107, 155 (2006), 319-324.

[5] D. Gao et al., Development and performance analysis of a hybrid fuel cell/battery bus with an axle integrated electric motor drive system, International Journal of Hydrogen Energy, doi:10.1016/j.ijhydene.2015.10.046, Vol. 41, Issue 2, (2016), 1161-1169

Authors

Dr. Laura Andaloro: Degree in Mechanical Engineering at University of Arcavacata (Cosenza, 2002) and Master in "Sistemi di produzione dell'idrogeno e mezzi di trasporto con celle a combustibile", University of Messina, 2008. Current position: Researcher at the Institute of Advanced Technologies for Energy "Nicola Giordano" of National Research Council of Italy (CNR-ITAE) in Messina.

Dr. Giuseppe Napoli: Degree in Electronic Engineering and PhD in "Tecnologie Avanzate per l'Ingegneria dell'Informazione" at University of Messina. Current position: Researcher at the CNR-ITAE of Messina performing activity on new technologies for electric and hybrid electric powertrain. The main activities concern the development of new system architectures and components for low emission vehicles and solutions for control and management of advanced subsystems.

Dr. Vincenzo Antonucci: Project leader Distributed Energy Systems of CNR, Dept Energy and Transportation and Research Manager of Energy Systems Project at CNR- ITAE, Former President of Commission CEI (Italy IEC section) WG 105 Fuel Cells, energy expert (Italian Ministery, European Commission, Regions), former Member of SRA and IP Working Group HFC Platform, Member Italian HFCPlatform and Leader Deployment Group, Member of Management for the definition of Energy Plan for Sicily Region.

Salvatore Micari: Degree in Electronic Engineering at Politecnico of Turin in 2010. He works at Italian National Research Council – Institute for Advanced Energy Technologies "Nicola Giordano" as an electronic engineer. His research activities include research, development and test of hybrid and electric vehicles for automotive applications. Design of software and electronic systems for automotive applications. Design of wired and wireless networks for both vehicle-vehicle and vehicle-infrastructure communications.

Antonio Polimeni: Degree in Civil Engineering and PhD in "Ingegneria dei Trasporti e della Logistica" at University of Reggio Calabria. He works at Italian National Research Council - Institute for Advanced Energy Technologies "Nicola Giordano". The main activities concern the research on vehicle route optimization, freight distribution in urban areas and road network design.